Cambridge International AS & A Level

Cambridge International Examinations
Cambridge International Advanced Subsidiary and Advanced Level

CANDIDATE NAME									
CENTRE NUMBER						CANDIDATE NUMBER				

7622874486

PHYSICS **9702/42**

Paper 4 A Level Structured Questions **May/June 2016**

2 hours

Candidates answer on the Question Paper.

No Additional Materials are required.

READ THESE INSTRUCTIONS FIRST

Write your Centre number, candidate number and name on all the work you hand in.
Write in dark blue or black pen.
You may use an HB pencil for any diagrams or graphs.
Do not use staples, paper clips, glue or correction fluid.
DO **NOT** WRITE IN ANY BARCODES.

Answer **all** questions.

Electronic calculators may be used.
You may lose marks if you do not show your working or if you do not use appropriate units.

At the end of the examination, fasten all your work securely together.
The number of marks is given in brackets [ ] at the end of each question or part question.

DC (NF/FD) 108407/3
© UCLES 2016

Data

speed of light in free space	$c = 3.00 \times 10^{8}\,\text{m s}^{-1}$
permeability of free space	$\mu_0 = 4\pi \times 10^{-7}\,\text{H m}^{-1}$
permittivity of free space	$\varepsilon_0 = 8.85 \times 10^{-12}\,\text{F m}^{-1}$
	$(\frac{1}{4\pi\varepsilon_0} = 8.99 \times 10^{9}\,\text{m F}^{-1})$
elementary charge	$e = 1.60 \times 10^{-19}\,\text{C}$
the Planck constant	$h = 6.63 \times 10^{-34}\,\text{J s}$
unified atomic mass unit	$1\,\text{u} = 1.66 \times 10^{-27}\,\text{kg}$
rest mass of electron	$m_\text{e} = 9.11 \times 10^{-31}\,\text{kg}$
rest mass of proton	$m_\text{p} = 1.67 \times 10^{-27}\,\text{kg}$
molar gas constant	$R = 8.31\,\text{J K}^{-1}\,\text{mol}^{-1}$
the Avogadro constant	$N_\text{A} = 6.02 \times 10^{23}\,\text{mol}^{-1}$
the Boltzmann constant	$k = 1.38 \times 10^{-23}\,\text{J K}^{-1}$
gravitational constant	$G = 6.67 \times 10^{-11}\,\text{N m}^2\,\text{kg}^{-2}$
acceleration of free fall	$g = 9.81\,\text{m s}^{-2}$

© UCLES 2016

Formulae

uniformly accelerated motion	$s = ut + \frac{1}{2}at^2$ $v^2 = u^2 + 2as$
work done on/by a gas	$W = p\Delta V$
gravitational potential	$\phi = -\frac{Gm}{r}$
hydrostatic pressure	$p = \rho gh$
pressure of an ideal gas	$p = \frac{1}{3}\frac{Nm}{V}\langle c^2 \rangle$
simple harmonic motion	$a = -\omega^2 x$
velocity of particle in s.h.m.	$v = v_0 \cos \omega t$ $v = \pm \omega \sqrt{(x_0^2 - x^2)}$
Doppler effect	$f_o = \frac{f_s v}{v \pm v_s}$
electric potential	$V = \frac{Q}{4\pi\varepsilon_0 r}$
capacitors in series	$1/C = 1/C_1 + 1/C_2 + \ldots$
capacitors in parallel	$C = C_1 + C_2 + \ldots$
energy of charged capacitor	$W = \frac{1}{2}QV$
electric current	$I = Anvq$
resistors in series	$R = R_1 + R_2 + \ldots$
resistors in parallel	$1/R = 1/R_1 + 1/R_2 + \ldots$
Hall voltage	$V_H = \frac{BI}{ntq}$
alternating current/voltage	$x = x_0 \sin \omega t$
radioactive decay	$x = x_0 \exp(-\lambda t)$
decay constant	$\lambda = \frac{0.693}{t_{\frac{1}{2}}}$

© UCLES 2016

[Turn over

Answer **all** the questions in the spaces provided.

1 A binary star consists of two stars A and B that orbit one another, as illustrated in Fig. 1.1.

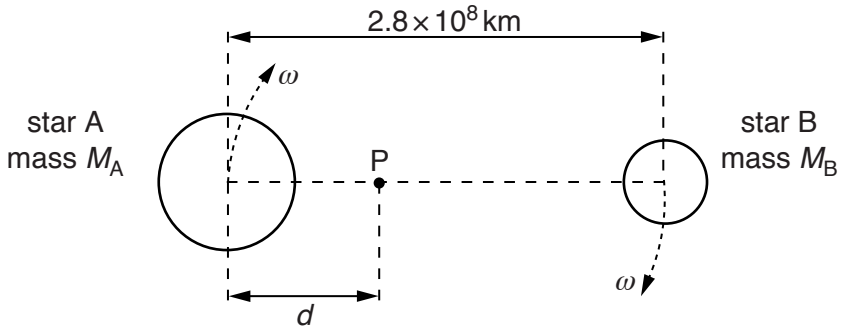

Fig. 1.1

The stars are in circular orbits with the centres of both orbits at point P, a distance d from the centre of star A.

(a) (i) Explain why the centripetal force acting on both stars has the same magnitude.

.....

.....

..... [2]

(ii) The period of the orbit of the stars about point P is 4.0 years.

Calculate the angular speed ω of the stars.

ω = ... rad s^{-1} [2]

© UCLES 2016

(b) The separation of the centres of the stars is 2.8×10^8 km.
The mass of star A is M_A. The mass of star B is M_B.
The ratio $\frac{M_A}{M_B}$ is 3.0.

(i) Determine the distance d.

d = ... km [3]

(ii) Use your answers in **(a)(ii)** and **(b)(i)** to determine the mass M_B of star B.
Explain your working.

M_B = ... kg [3]

[Total: 10]

2 **(a)** State what is meant by

(i) the Avogadro constant N_A,

.....

..... [1]

(ii) the mole.

.....

..... [2]

(b) A container has a volume of $1.8 \times 10^4\ cm^3$.

The ideal gas in the container has a pressure of $2.0 \times 10^7\ Pa$ at a temperature of 17 °C.

Show that the amount of gas in the cylinder is 150 mol.

[1]

(c) Gas molecules leak from the container in **(b)** at a constant rate of $1.5 \times 10^{19}\ s^{-1}$.
The temperature remains at 17 °C.
In a time t, the amount of gas in the container is found to be reduced by 5.0%.

Calculate

(i) the pressure of the gas after the time t,

pressure = ... Pa [2]

© UCLES 2016

(ii) the time t.

t = ... s [3]

[Total: 9]

3 **(a)** Explain what is meant by the statement that two bodies are in *thermal equilibrium*.

.....

.....

..... [1]

(b) Suggest suitable types of thermometer, one in each case, to measure

(i) the temperature of the flame of a Bunsen burner,

..... [1]

(ii) the change in temperature of a small crystal when it is exposed to a pulse of ultrasound energy.

..... [1]

(c) Some water is heated so that its temperature changes from 26.5 °C to a final temperature of 38.0 °C.

State, to an appropriate number of decimal places,

(i) the change in temperature in kelvin,

change = ... K [1]

(ii) the final temperature in kelvin.

final temperature = ... K [1]

[Total: 5]

4 A metal block hangs vertically from one end of a spring. The other end of the spring is tied to a thread that passes over a pulley and is attached to a vibrator, as shown in Fig. 4.1.

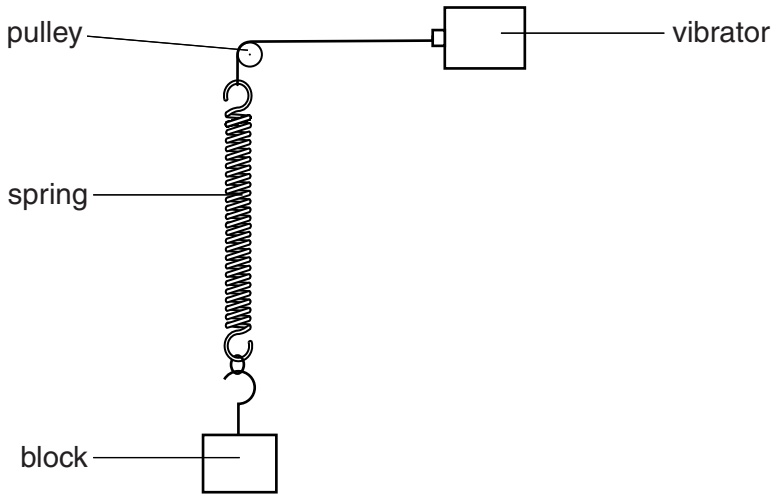

Fig. 4.1

(a) The vibrator is switched off.
The metal block of mass 120 g is displaced vertically and then released. The variation with time t of the displacement y of the block from its equilibrium position is shown in Fig. 4.2.

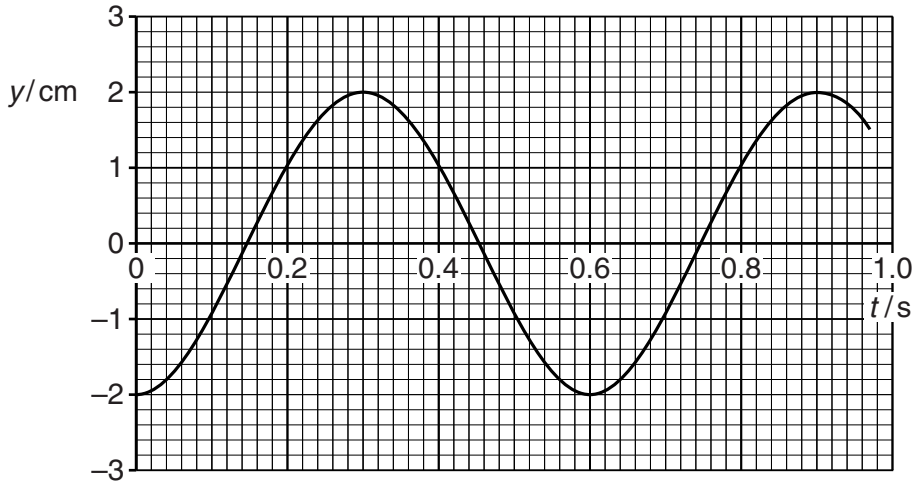

Fig. 4.2

For the vibrations of the block, calculate

(i) the angular frequency ω,

ω = ... rad s^{-1} [2]

© UCLES 2016

(ii) the energy of the vibrations.

energy = ...J [2]

(b) The vibrator is now switched on.

The frequency of vibration is varied from 0.7*f* to 1.3*f* where *f* is the frequency of vibration of the block in **(a)**.

For the block, complete Fig. 4.3 to show the variation with frequency of the amplitude of vibration. Label this line A. [3]

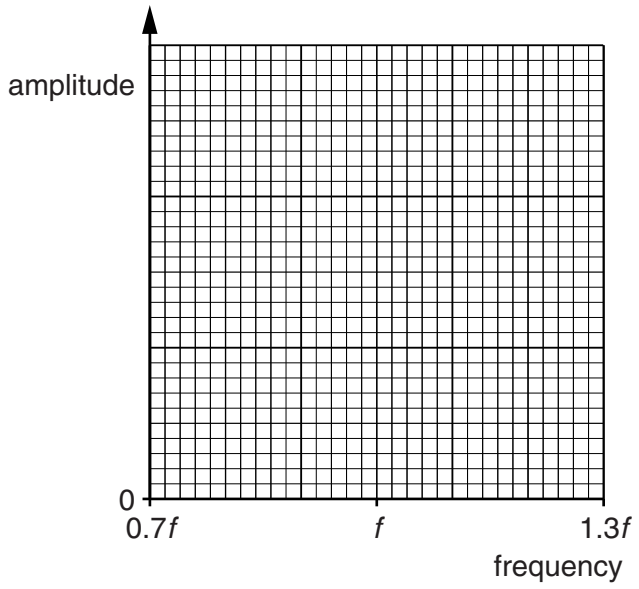

Fig. 4.3

(c) Some light feathers are now attached to the block in **(b)** to increase air resistance.

The frequency of vibration is once again varied from 0.7*f* to 1.3*f*. The new amplitude of vibration is measured for each frequency.

On Fig. 4.3, draw a line to show the variation with frequency of the amplitude of vibration. Label this line B. [2]

[Total: 9]

© UCLES 2016

5 The signal from a radio station is amplitude modulated.

(a) State what is meant by *amplitude modulation* (AM).

.....

.....

..... [2]

(b) The variation with frequency of the intensity of the signal from the radio station is shown in Fig. 5.1.

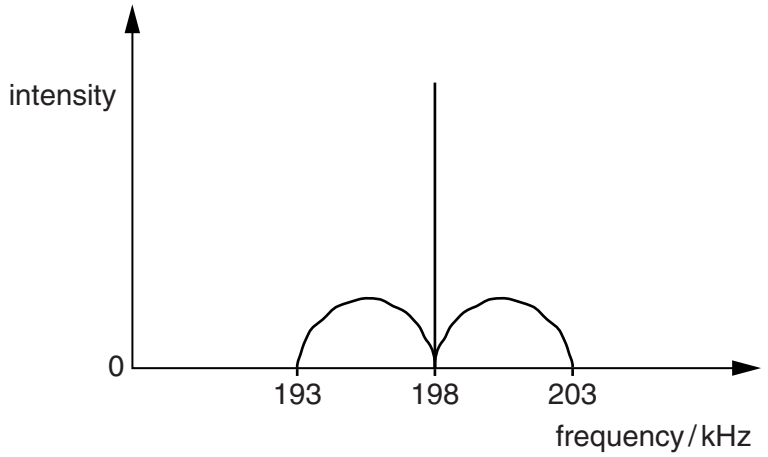

Fig. 5.1

State, for this signal,

(i) the bandwidth,

bandwidth = ... kHz [1]

(ii) the maximum audio frequency that is broadcast.

maximum frequency = ... kHz [1]

© UCLES 2016

(c) A transmission line of length 45 km has an attenuation per unit length of 2.0 dB km^{-1}.

The input power to the transmission line is 500 mW.
The minimum acceptable signal-to-noise ratio is 24 dB for background noise of 5.0×10^{-13} W.

(i) Calculate the minimum acceptable power output from the transmission line.

power = ... W [2]

(ii) Use your answer in **(i)** to determine whether it is possible to transmit the signal along the transmission line.

[2]

[Total: 8]

BLANK PAGE

© UCLES 2016

6 **(a)** By reference to electric field lines, explain why, for points outside an isolated spherical conductor, the charge on the sphere may be considered to act as a point charge at its centre.

.....

.....

.....

..... [2]

(b) Two isolated protons are separated in a vacuum by a distance x.

(i) Calculate the ratio

$$\frac{\text{electric force between the two protons}}{\text{gravitational force between the two protons}}.$$

ratio = ... [3]

(ii) By reference to your answer in **(i)**, suggest why gravitational forces are not considered when calculating the force between charged particles.

.....

..... [1]

[Total: 6]

7 **(a)** State two uses of capacitors in electrical circuits, other than for the smoothing of direct current.

1. .....

2. .....
[2]

(b) The combined capacitance between terminals A and B of the arrangement shown in Fig. 7.1 is 4.0 μF.

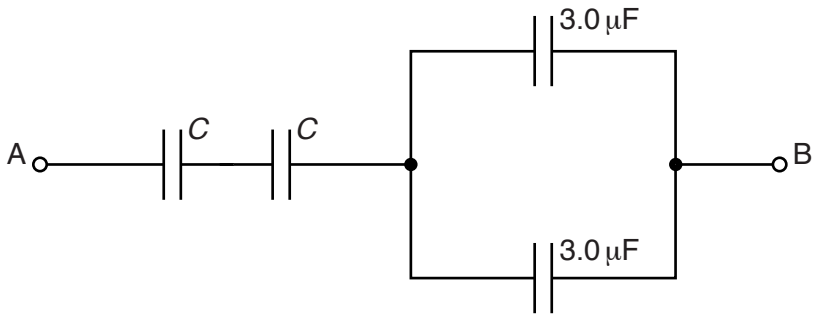

Fig. 7.1

Two capacitors each have capacitance *C* and the remaining capacitors each have capacitance 3.0 μF.

The potential difference (p.d.) between terminals A and B is 12 V.

(i) Determine the capacitance *C*.

C = ... μF [2]

(ii) Calculate the magnitude of the total positive charge transferred to the arrangement.

charge = ... μC [2]

© UCLES 2016

(iii) Use your answer in **(ii)** to state the magnitude of the charge on one plate of

1. a capacitor of capacitance *C*,

charge = ... μC

2. a capacitor of capacitance 3.0 μF.

charge = ... μC
[2]

[Total: 8]

8 An ideal operational amplifier (op-amp) has infinite voltage gain and infinite slew rate.

(a) State what is meant by

(i) the *voltage gain*,

.....

..... [1]

(ii) *infinite slew rate*.

.....

.....

..... [2]

(b) A non-inverting amplifier circuit incorporating an ideal op-amp is shown in Fig. 8.1.

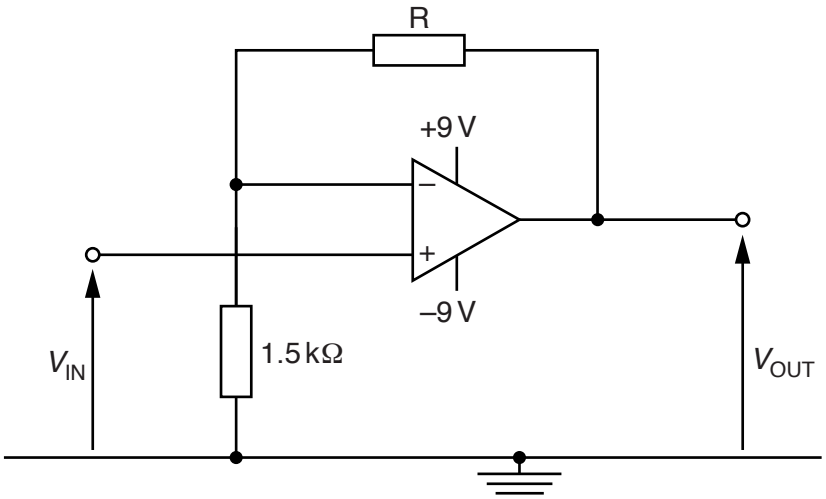

Fig. 8.1

The supply to the op-amp is +9 V / –9 V.
The voltage gain of the amplifier circuit is 12.

Determine the resistance of resistor R.

resistance = ... Ω [2]

(c) For the circuit of Fig. 8.1, the variation with time t of the input potential V_{IN} to the amplifier is shown in Fig. 8.2.

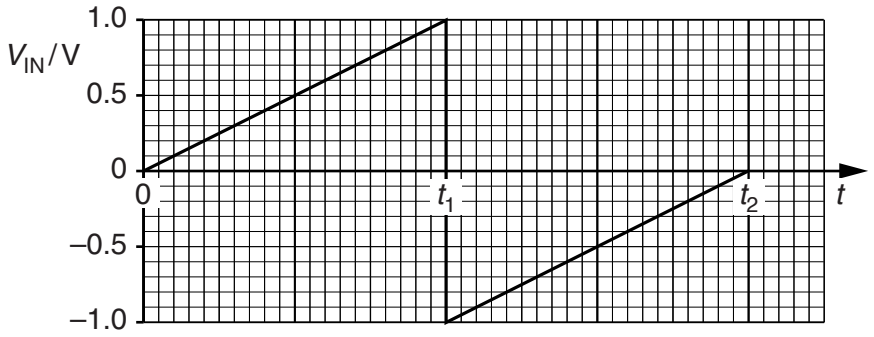

Fig. 8.2

On Fig. 8.3, show the variation with time t of the output potential V_{OUT} for time $t = 0$ to time $t = t_2$.

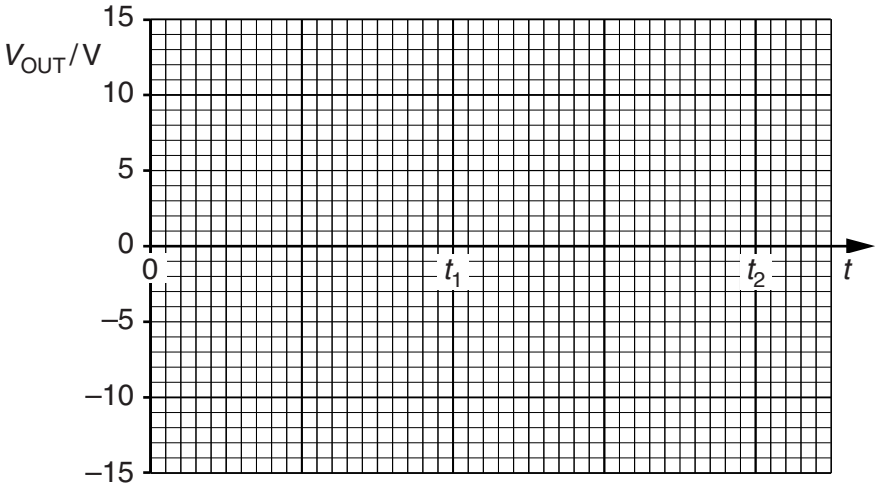

Fig. 8.3

[4]

[Total: 9]

9 A magnetic field of flux density B is normal to face PQRS of a slice of a conducting material, as shown in Fig. 9.1.

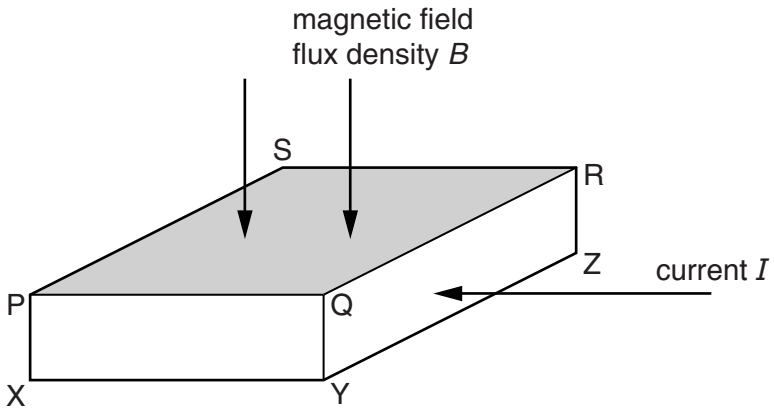

Fig. 9.1

A current I in the slice is normal to face QRZY of the slice.

The Hall voltage V_H across the slice is given by the expression

$$V_H = \frac{BI}{ntq}.$$

(a) (i) State what is represented by the symbol n.

.....

..... [1]

(ii) The symbol t represents the length of one side of the slice. Use letters from Fig. 9.1 to identify t.

..... [1]

(b) (i) In general, the Hall voltage produced in a slice of a metal is very small.
For a slice of the same dimensions with the same current and magnetic flux density, the Hall voltage produced in a semiconductor material is much larger.
Suggest and explain why.

.....

.....

..... [2]

© UCLES 2016

(ii) In some semiconducting materials, electrons are mainly responsible for conduction.
In other semiconducting materials, holes are mainly responsible for conduction.
Suggest and explain the difference, if any, that conduction by electrons or by holes will have on the Hall voltage.

.....

.....

.....

..... [3]

[Total: 7]

10 Two coils P and Q are placed close to one another, as shown in Fig. 10.1.

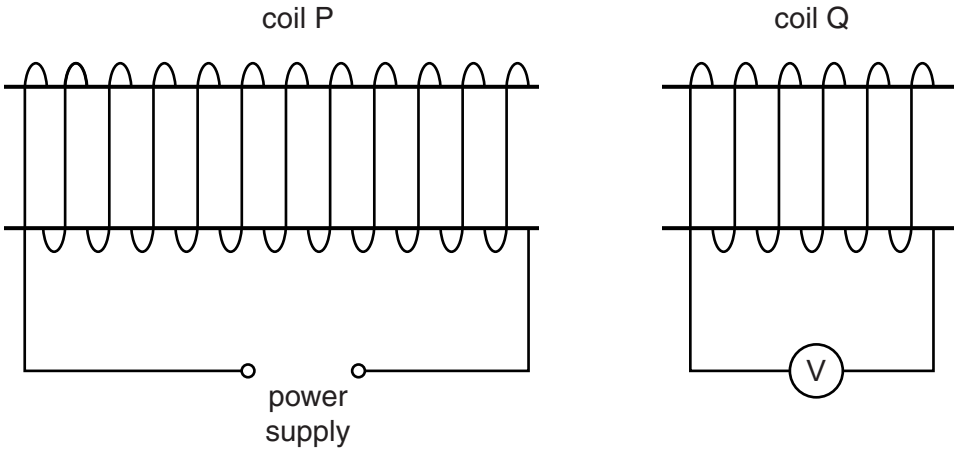

Fig. 10.1

(a) The current in coil P is constant.

An iron rod is inserted into coil P.

Explain why, during the time that the rod is moving, there is a reading on the voltmeter connected to coil Q.

.....

.....

.....

..... [2]

(b) The current in coil P is now varied as shown in Fig. 10.2.

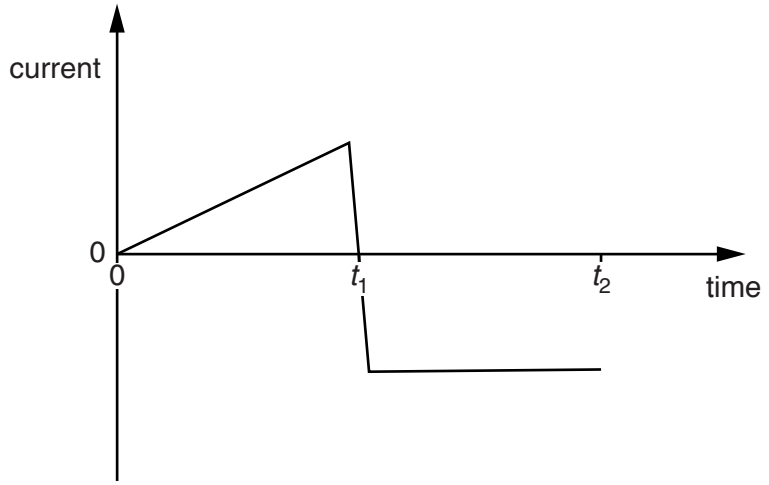

Fig. 10.2

On Fig. 10.3, show the variation with time of the reading of the voltmeter connected to coil Q for time $t = 0$ to time $t = t_2$.

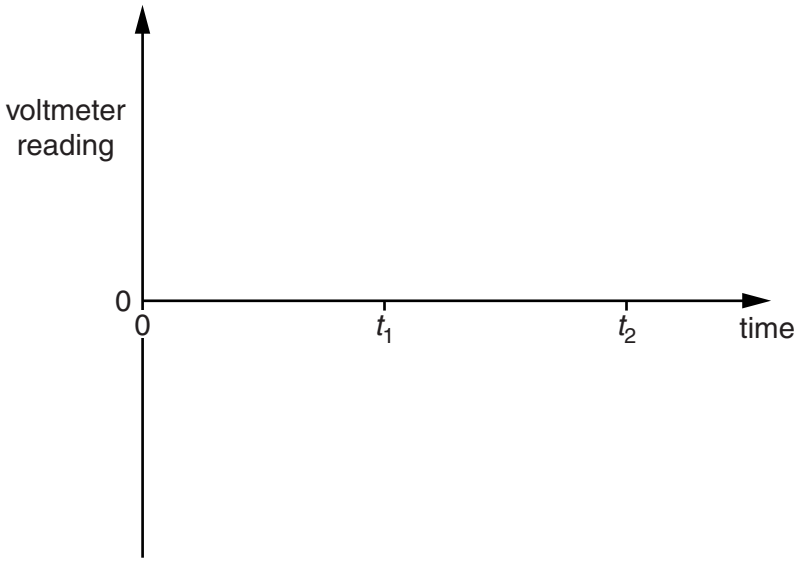

Fig. 10.3 [4]

[Total: 6]

11 A bridge rectifier contains four ideal diodes A, B, C and D, as shown in Fig. 11.1.

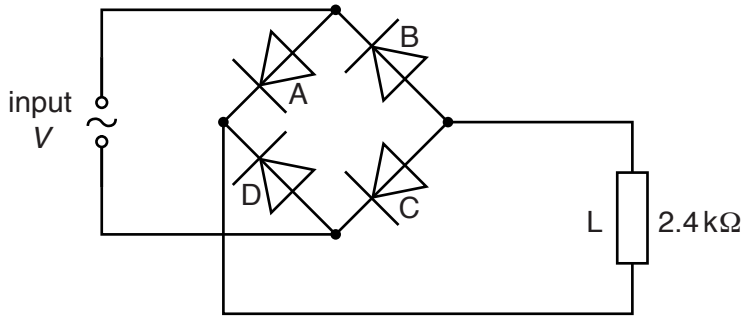

Fig. 11.1

The output of the rectifier is connected to a load L of resistance 2.4 kΩ.

(a) On Fig. 11.1, mark with the letter P the positive terminal of the load. [1]

(b) The variation with time *t* of the potential difference *V* across the input to the rectifier is shown in Fig. 11.2.

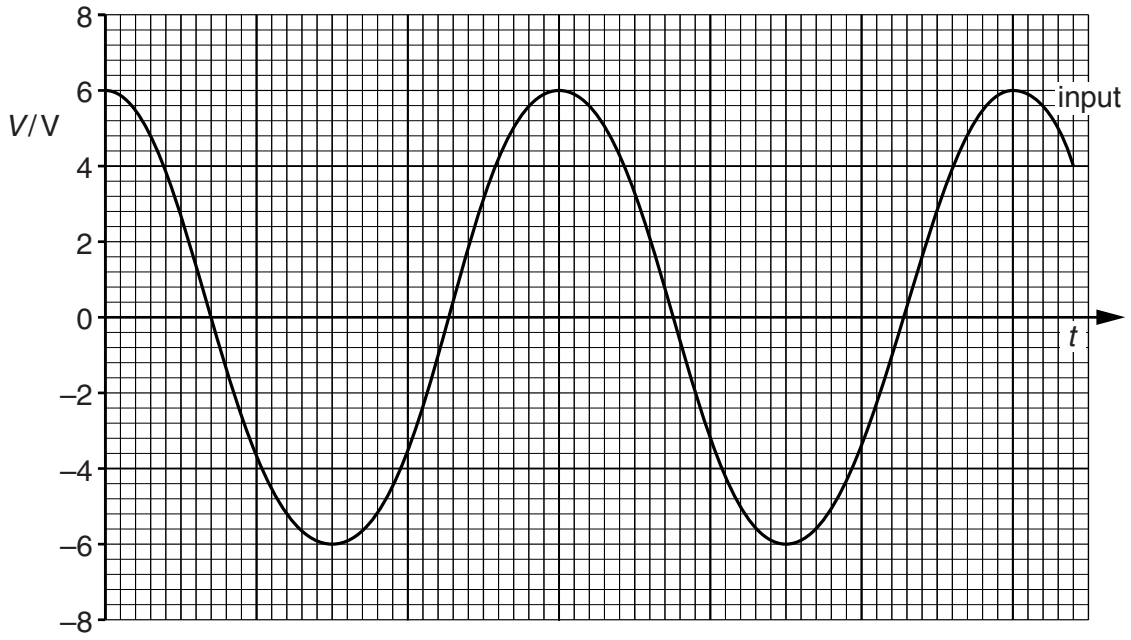

Fig. 11.2

Calculate the root-mean-square (r.m.s.) current in the load L.

r.m.s. current = ... A [2]

© UCLES 2016

(c) The potential difference across the load L is to be smoothed using a capacitor.

(i) On Fig. 11.1, draw the symbol for a capacitor, connected to produce smoothing. [1]

(ii) The minimum potential difference across the load L with the smoothing capacitor connected is 3.0 V.

On Fig. 11.2, sketch the variation with time *t* of the potential difference across the load L. [3]

[Total: 7]

12 High-energy electrons collide with a metal target, producing X-ray photons.

The variation with wavelength of the intensity of the X-ray beam is illustrated in Fig. 12.1.

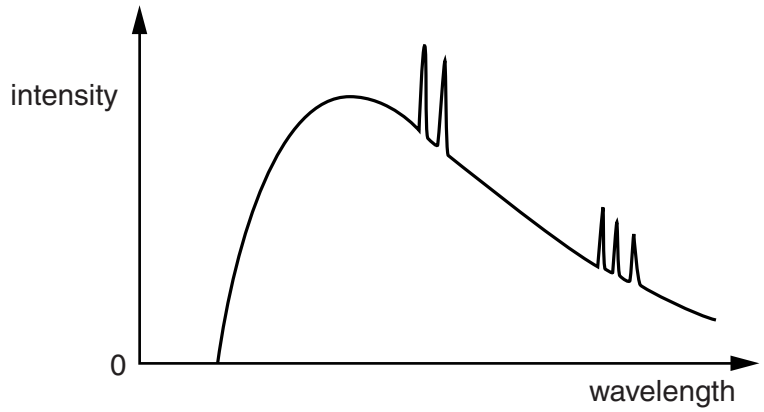

Fig. 12.1

(a) Explain why there is

(i) a continuous distribution of wavelengths,

.....

.....

.....

..... [3]

(ii) a sharp cut-off at short wavelength,

.....

.....

..... [2]

(iii) a series of peaks superimposed on the continuous distribution of wavelengths.

.....

..... [1]

(b) In the X-ray imaging of body structures, longer wavelength photons are frequently filtered out of the X-ray beam.

(i) State how this filtering is achieved.

.....

..... [1]

© UCLES 2016

(ii) Suggest the reason for this filtering.

.....

..... [1]

[Total: 8]

13 (a) Explain what is meant by *gamma radiation* (γ-*radiation*).

.....

.....

..... [2]

(b) A source of gamma radiation is placed a fixed distance away from a detector and counter, as illustrated in Fig. 13.1.

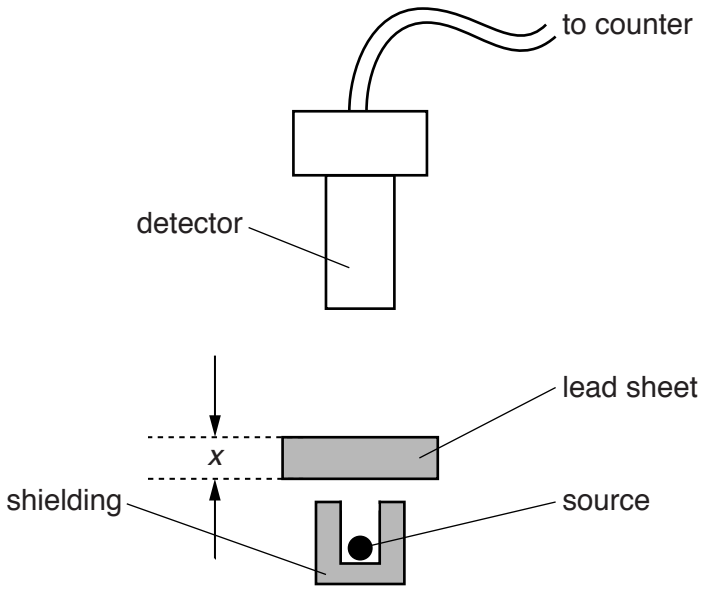

Fig. 13.1

A sheet of lead of thickness x is placed between the source and the detector.
The average count rate C, corrected for background, is recorded. This is repeated for different values of x.
The variation with thickness x of $\ln C$ is shown in Fig. 13.2.

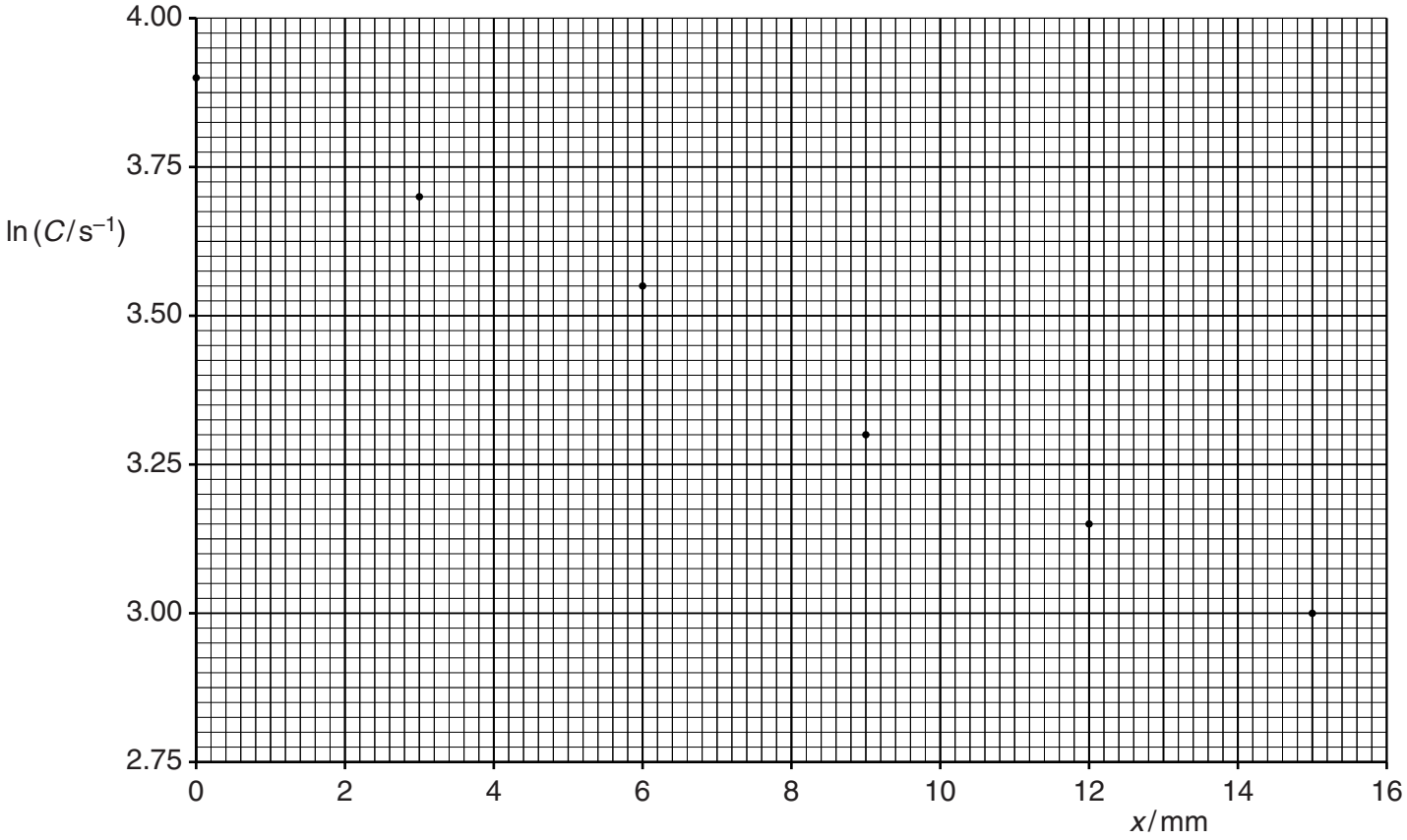

Fig. 13.2

The absorption of gamma radiation in lead may be represented by the equation

$$C = C_0 e^{-\mu x}$$

where C_0 is the count rate for $x = 0$ and μ is the linear attenuation (absorption) coefficient.

Use Fig. 13.2 to determine the linear attenuation coefficient μ for this gamma radiation in lead.

μ = ... mm^{-1} [4]

Question 13 continues on the next page.

(c) The value of μ calculated in **(b)** is for gamma radiation in lead.

Suggest and explain whether the value of μ for aluminium would be the same, greater or smaller.

.....

.....

..... [2]

[Total: 8]

Permission to reproduce items where third-party owned material protected by copyright is included has been sought and cleared where possible. Every reasonable effort has been made by the publisher (UCLES) to trace copyright holders, but if any items requiring clearance have unwittingly been included, the publisher will be pleased to make amends at the earliest possible opportunity.

To avoid the issue of disclosure of answer-related information to candidates, all copyright acknowledgements are reproduced online in the Cambridge International Examinations Copyright Acknowledgements Booklet. This is produced for each series of examinations and is freely available to download at www.cie.org.uk after the live examination series.

Cambridge International Examinations is part of the Cambridge Assessment Group. Cambridge Assessment is the brand name of University of Cambridge Local Examinations Syndicate (UCLES), which is itself a department of the University of Cambridge.